Low Current Positive Voltage Regulator

LM78LXXA3

TO-92

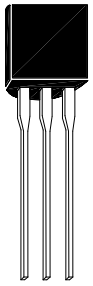

O G I

Description

The LM78LXXA3 series of positive regulators are available in the TO-92 package and with 5V, 6V, 8V, 9V, 10V, 12V, 15V, 18V and 24V fixed output voltages, making it useful in a wide range of applications. These regulators can provide local on-card regulation, eliminating the distribution problems associated with single point regulation. Each type employs internal current limiting, thermal shut-down and safe operating area protection, making it essentially indestructible. If adequate heat sinking is provided, they can deliver over 100mA output current. Although designed primarily as fixed voltage regulators, these devices can be used with external components to obtain adjustable voltages and currents. LM78LXXA3 is characterized for operation from -20℃ to 125℃.

Features:

- Internal Short-Circuit Current Limiting
- Internal Thermal Overload Protection
- No External Components Required
- Pb-free package

Typical Application

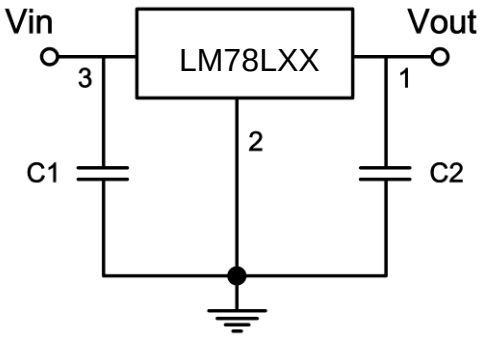

A common ground is required between the input and the output voltages. The input voltage must remain typically 2.0V above the output voltage even during the low point on the input ripple voltage.

Note : C1 and C2 are required if regulator is located far from power supply filter and load, or oscillation may induced on the loop.

Schematic Diagram

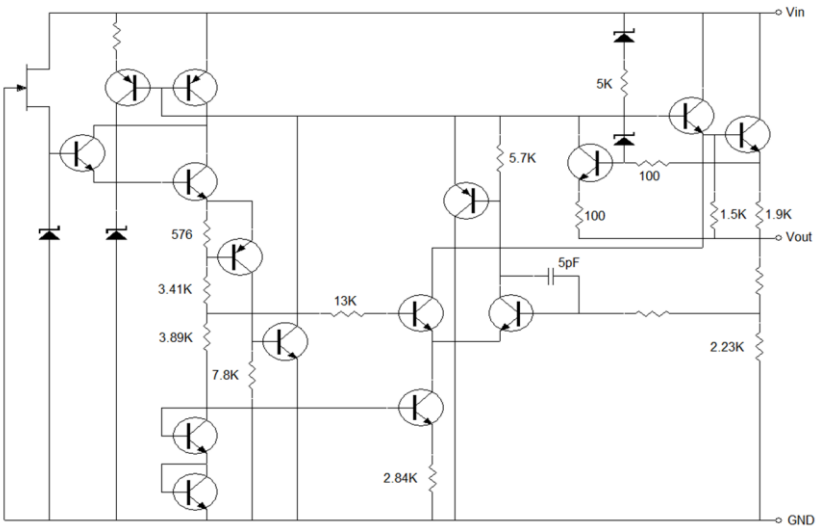

Absolute Maximum Ratings

Parameter		Ratings	Unit
Input Voltage	LM78L05 ~ 10	30	V
	LM78L12 ~18	35	
	LM78L24	40	
Output Current		100	mA
Operating Junction Temperature Range		-40 ~ +125	℃
Storage Temperature Range		-65 ~ +150	℃
Power Dissipation		625 (Note)	mW

Note : When tested in free air condition, without heat sinking.

Electrical Characteristics

LM78L05 (Vin=10V, Io=40mA, Tj=0~125°C, Cin=0.33uF, Cout=0.1uF ,unless otherwise noted) (Note 1)

Symbol		Parameter	Min	Typ	Max	Conditions	Units
Vo	A-rank(3%)	Output Voltage	4.85	5	5.15	Vin=10V, Io=40mA,Tj=25°C 7V≤Vin≤20V, 1mA≤Io≤40mA Vin=10V, 1mA≤Io≤70mA (Note 2)	V
	B-rank(5%)		4.75	-	5.25		
ΔVo		Line Regulation	-	32	150	7V≤Vin≤20V	mV
			-	26	100	8V≤Vin≤20V	
ΔVo		Load Regulation	-	15	60	1mA≤Io≤100mA	mV
			-	8	30	1mA≤Io≤40mA	
IQ		Quiescent Current	-	2.6	6	Tj=25°C, Vin=10V, Io=40mA	mA
ΔIQ		Quiescent Current Change	-	-	1.5	8V≤Vin≤20V	mA
			-	-	0.1	1mA≤Io≤40mA	
Vn		Output Noise Voltage	-	42	-	10Hz≤f≤100KHz	μV
ΔVin / ΔVout		Ripple Rejection	41	49	-	8V≤Vin≤18V, f=120Hz	dB
ΔVo/ΔTj		Temperature Stability	-	-0.65	-	Io=5mA, 0°C ≤Tj≤125°C	mV/℃
VD		Dropout Voltage	-	1.7	-	Io=40mA	V

LM78L06 (Vin=11V, Io=40mA, Tj=0~125°C, Cin=0.33uF, Cout=0.1uF, unless otherwise noted) (Note 1)

Symbol		Parameter	Min	Typ	Max	Conditions	Units
Vo	A-rank(3%)	Output Voltage	5.82	6	6.18	Vin=11V, Io=40mA,Tj=25°C 8V≤Vin≤20V, 1mA≤Io≤40mA Vin=11V, 1mA≤Io≤70mA (Note 2)	V
	B-rank(5%)		5.70	-	6.30		
ΔVo		Line Regulation	-	35	175	8V≤Vin≤20V	mV
			-	29	125	9V≤Vin≤20V	
ΔVo		Load Regulation	-	16	80	1mA≤Io≤100mA	mV
			-	9	40	1mA≤Io≤40mA	
IQ		Quiescent Current	-	2.7	6	Tj=25°C, Vin=12V, Io=40mA	mA
ΔIQ		Quiescent Current Change	-	-	1.5	9V≤Vin≤20V	mA
			-	-	0.1	1mA≤Io≤40mA	
Vn		Output Noise Voltage	-	46	-	10Hz≤f≤100KHz	μV
ΔVin / ΔVout		Ripple Rejection	40	48	-	9V≤Vin≤19V, f=120Hz	dB
ΔVo/ΔTj		Temperature Stability	-	0.75	-	Io=5mA, 0°C ≤Tj≤125°C	mV/℃
VD		Dropout Voltage	-	1.7	-	Io=40mA	V

LM78L08(Vin=14V, Io=40mA, Tj=0~125°C, Cin=0.33uF, Cout=0.1uF, unless otherwise noted) (Note 1)

Symbol		Parameter	Min	Typ	Max	Conditions	Units
Vo	A-rank(3%)	Output Voltage	7.76	8	8.24	Vin=14V, Io=40mA,Tj=25°C 10.5V≤Vin≤23V, 1mA≤Io≤40mA Vin=14V,1mA≤Io≤70mA (Note 2)	V
	B-rank(5%)		7.60	-	8.40		
ΔVo		Line Regulation	-	42	175	10.5V≤Vin≤23V	mV
			-	36	125	11V≤Vin≤23V	
ΔVo		Load Regulation	-	18	80	1mA≤Io≤100mA	mV
			-	10	40	1mA≤Io≤70mA	
IQ		Quiescent Current	-	2.8	6	Tj=25°C, Vin=14V, Io=40mA	mA
ΔIQ		Quiescent Current Change	-	-	1.5	11V≤Vin≤23V	mA
			-	-	0.1	1mA≤Io≤40mA	
Vn		Output Noise Voltage	-	54	-	10Hz≤f≤100KHz	μV
ΔVin / ΔVout		Ripple Rejection	37	46	-	13V≤Vin≤23V, f=120Hz	dB
ΔVo/ΔTj		Temperature Stability	-	0.75	-	Io=5mA, 0°C ≤Tj≤125°C	mV/℃
VD		Dropout Voltage	-	1.7	-	Io=40mA	V

LM78L09 (Vin=16V, Io=40mA, Tj=0~125°C, Cin=0.33uF, Cout=0.1uF, unless otherwise noted) (Note 1)

Symbol		Parameter	Min	Typ	Max	Conditions	Units
Vo	A-rank(3%)	Output Voltage	8.73	9	9.27	Vin=16V, Io=40mA,Tj=25°C 12V≤Vin≤24V, 1mA≤Io≤40mA Vin=16V,1mA≤Io≤70mA (Note 2)	V
	B-rank(5%)		8.55	-	9.45		
ΔVo		Line Regulation	-	45	175	12V≤Vin≤24V	mV
			-	40	125	13V≤Vin≤24V	
ΔVo		Load Regulation	-	19	90	1mA≤Io≤100mA	mV
			-	11	40	1mA≤Io≤40mA	
IQ		Quiescent Current	-	2.9	6	Tj=25°C, Vin=16V, Io=40mA	mA
ΔIQ		Quiescent Current Change	-	-	1.5	13V≤Vin≤24V	mA
			-	-	0.1	1mA≤Io≤40mA	
Vn		Output Noise Voltage	-	58	-	10Hz≤f≤100KHz	μV
ΔVin / ΔVout		Ripple Rejection	38	45	-	15V≤Vin≤25V, f=120Hz	dB
ΔVo/ΔTj		Temperature Stability	-	0.75	-	Io=5mA, 0°C ≤Tj≤125°C	mV/℃
VD		Dropout Voltage	-	1.7	-	Io=40mA	V

LM78L10(Vin=17V, Io=40mA, Tj=0~125°C, Cin=0.33uF, Cout=0.1uF, unless otherwise noted) (Note 1)

Symbol		Parameter	Min	Typ	Max	Conditions	Units
Vo	A-rank(3%)	Output Voltage	9.70	10	10.30	Vin=17V, Io=40mA,Tj=25°C 13V≤Vin≤25V, 1mA≤Io≤40mA Vin=17V,1mA≤Io≤70mA (Note 2)	V
	B-rank(5%)		9.50	-	10.50		
ΔVo		Line Regulation	-	51	175	13V≤Vin≤25V	mV
			-	42	125	14V≤Vin≤25V	
ΔVo		Load Regulation	-	20	90	1mA≤Io≤100mA	mV
			-	11	40	1mA≤Io≤40mA	
IQ		Quiescent Current	-	3	6	Tj=25°C, Vin=17V, Io=40mA	mA
ΔIQ		Quiescent Current Change	-	-	1.5	14V≤Vin≤25V	mA
			-	-	0.1	1mA≤Io≤40mA	
Vn		Output Noise Voltage	-	62	-	10Hz≤f≤100KHz	μV
ΔVin / ΔVout		Ripple Rejection	37	44	-	15V≤Vin≤25V, f=120Hz	dB
ΔVo/ΔTj		Temperature Stability	-	0.75	-	Io=5mA, 0°C ≤Tj≤125°C	mV/℃
VD		Dropout Voltage	-	1.7	-	Io=40mA	V

LM78L12 (Vin=19V, Io=40mA, Tj=0~125°C, Cin=0.33uF, Cout=0.1uF, unless otherwise noted) (Note 1)

Symbol		Parameter	Min	Typ	Max	Conditions	Units
Vo	A-rank(3%)	Output Voltage	11.64	12	12.36	Vin=19V, Io=40mA,Tj=25°C 14V≤Vin≤27V, 1mA≤Io≤40mA Vin=19V,1mA≤Io≤70mA (Note 2)	V
	B-rank(5%)		11.40	-	12.60		
ΔVo		Line Regulation	-	55	250	14V≤Vin≤27V	mV
			-	49	200	16V≤Vin≤27V	
ΔVo		Load Regulation	-	22	100	1mA≤Io≤100mA	mV
			-	13	50	1mA≤Io≤40mA	
IQ		Quiescent Current	-	3.1	6.5	Tj=25°C, Vin=19V, Io=40mA	mA
ΔIQ		Quiescent Current Change	-	-	1.5	16V≤Vin≤27V	mA
			-	-	0.1	1mA≤Io≤40mA	
Vn		Output Noise Voltage	-	70	-	10Hz≤f≤100KHz	μV
ΔVin / ΔVout		Ripple Rejection	37	42	-	15V≤Vin≤25V, f=120Hz	dB
ΔVo/ΔTj		Temperature Stability	-	-1.0	-	Io=5mA, 0°C ≤Tj≤125°C	mV/℃
VD		Dropout Voltage	-	1.7	-	Io=40mA	V

LM78L15 (Vin=23V, Io=40mA, Tj=0~125°C, Cin=0.33uF, Cout=0.1uF, unless otherwise noted) (Note 1)

Symbol		Parameter	Min	Typ	Max	Conditions	Units
Vo	A-rank(3%)	Output Voltage	14.55	15	15.45	Vin=23V, Io=40mA,Tj=25°C 17.5V≤Vin≤30V, 1mA≤Io≤40mA Vin=23V,1mA≤Io≤70mA (Note 2)	V
	B-rank(5%)		14.25	-	15.75		
ΔVo		Line Regulation	-	65	300	17.5V≤Vin≤30V	mV
			-	58	250	19V≤Vin≤30V	
ΔVo		Load Regulation	-	25	150	1mA≤Io≤100mA	mV
			-	15	75	1mA≤Io≤70mA	
IQ		Quiescent Current	-	3.4	6.5	Tj=25°C, Vin=23V, Io=40mA	mA
ΔIQ		Quiescent Current Change	-	-	1.5	19V≤Vin≤30V	mA
			-	-	0.1	1mA≤Io≤40mA	
Vn		Output Noise Voltage	-	82	-	10Hz≤f≤100KHz	μV
ΔVin / ΔVout		Ripple Rejection	34	39	-	18.5V≤Vin≤28.5V, f=120Hz	dB
ΔVo/ΔTj		Temperature Stability	-	-1.3	-	Io=5mA, 0°C ≤Tj≤125°C	mV/℃
VD		Dropout Voltage	-	1.7	-	Io=40mA	V

LM78L18 (Vin=26V, Io=40mA, Tj=0~125°C, Cin=0.33uF, Cout=0.1uF, unless otherwise noted) (Note 1)

Symbol		Parameter	Min	Typ	Max	Conditions	Units
Vo	A-rank(3%)	Output Voltage	17.46	18	18.54	Vin=26V, Io=40mA,Tj=25°C 20.5V≤Vin≤33V, 1mA≤Io≤40mA Vin=26V,1mA≤Io≤70mA(Note 2)	V
	B-rank(5%)		17.10	-	18.90		
ΔVo		Line Regulation	-	70	360	20.5V≤Vin≤33V	mV
			-	64	300	22V≤Vin≤33V	
ΔVo		Load Regulation	-	27	180	1mA≤Io≤100mA	mV
			-	19	90	1mA≤Io≤40mA	
IQ		Quiescent Current	-	3.5	6.5	Tj=25°C, Vin=26V, Io=40mA	mA
ΔIQ		Quiescent Current Change	-	-	1.5	21V≤Vin≤33V	mA
			-	-	0.1	1mA≤Io≤40mA	
Vn		Output Noise Voltage	-	89	-	10Hz≤f≤100KHz	μV
ΔVin / ΔVout		Ripple Rejection	32	36	-	21.5V≤Vin≤31.5V, f=120Hz	dB
ΔVo/ΔTj		Temperature Stability	-	-1.8	-	Io=5mA, 0°C ≤Tj≤125°C	mV/℃
VD		Dropout Voltage	-	1.7	-	Io=40mA	V

LM78L24 (Vin=32V, Io=40mA, Tj=0~125°C, Cin=0.33uF, Cout=0.1uF, unless otherwise noted) (Note 1)

Symbol		Parameter	Min	Typ	Max	Conditions	Units
Vo	A-rank(3%)	Output Voltage	23.28	24	24.72	Vin=32V, Io=40mA,Tj=25°C 26.5V≤Vin≤39V, 1mA≤Io≤40mA Vin=32V,1mA≤Io≤70mA (Note 2)	V
	B-rank(5%)		22.80	24	25.20		
ΔVo		Line Regulation	-	95	480	26.5V≤Vin≤39V	mV
			-	78	400	29V≤Vin≤39V	
ΔVo		Load Regulation	-	41	240	1mA≤Io≤100mA	mV
			-	28	120	1mA≤Io≤40mA	
IQ		Quiescent Current	-	3.6	6.5	Tj=25°C, Vin=32V, Io=40mA	mA
ΔIQ		Quiescent Current Change	-	-	1.5	28V≤Vin≤39V	mA
			-	-	0.1	1mA≤Io≤40mA	
Vn		Output Noise Voltage	-	97	-	10Hz≤f≤100KHz	μV
ΔVin / ΔVout		Ripple Rejection	30	33	-	27.5V≤Vin≤37.5V, f=120Hz	dB
ΔVo/ΔTj		Temperature Stability	-	-2.0	-	Io=5mA, 0°C ≤Tj≤125°C	mV/℃
VD		Dropout Voltage	-	1.7	-	Io=40mA	V

Note : 1. The maximum steady state usable output current is dependent on input voltage, heat sinking, lead length of the package and copper of PCB. The data above represent pulse test conditions with junction temperatures specified at the initial of test.
2. Power dissipation<0.625W

Ordering Information

Device	Output Voltage Tolerance	Package	Shipping
LM78LXXA3-A-TB-G	±3%	TO-92 (Pb-free lead plating and halogen-free package)	2000 pcs / Tape & Box
LM78LXXA3-B-TB-G	±5%		
LM78LXXA3-A-BK-G	±3%		1000 pcs/ bag, 10 bags/box, 10boxes/carton
LM78LXXA3-B-BK-G	±5%		

Characteristic Curves

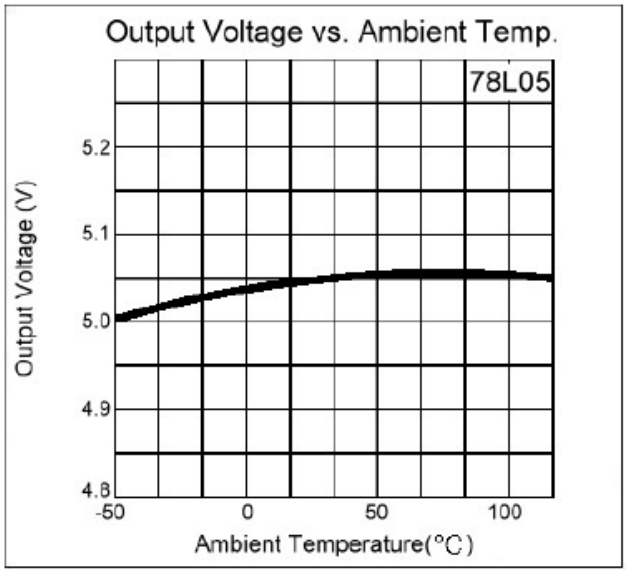

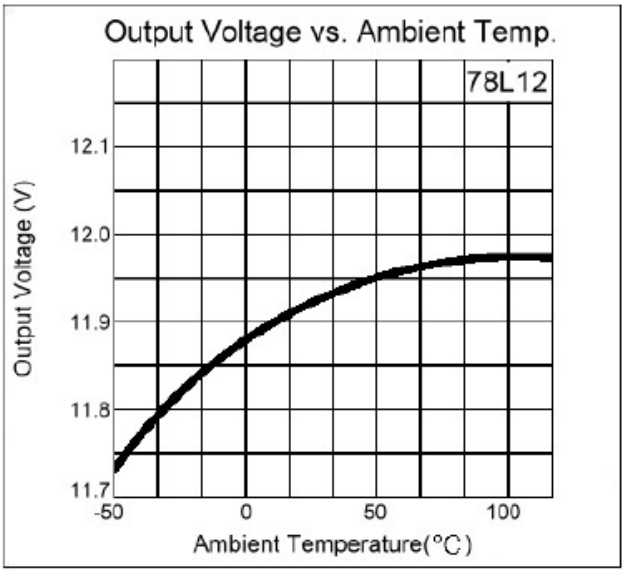

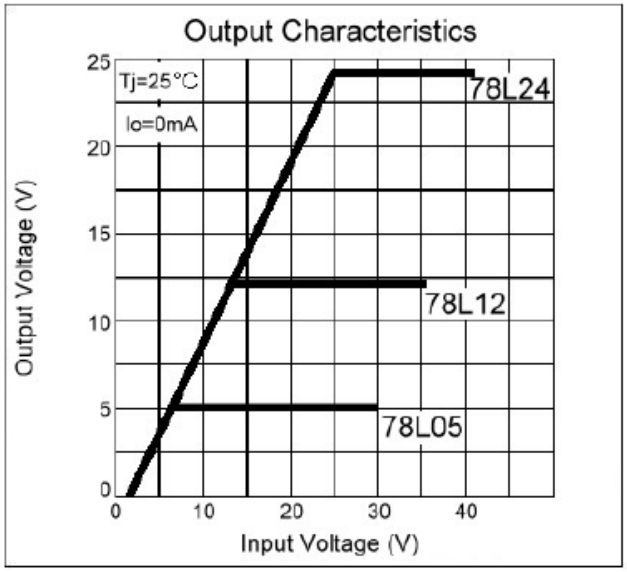

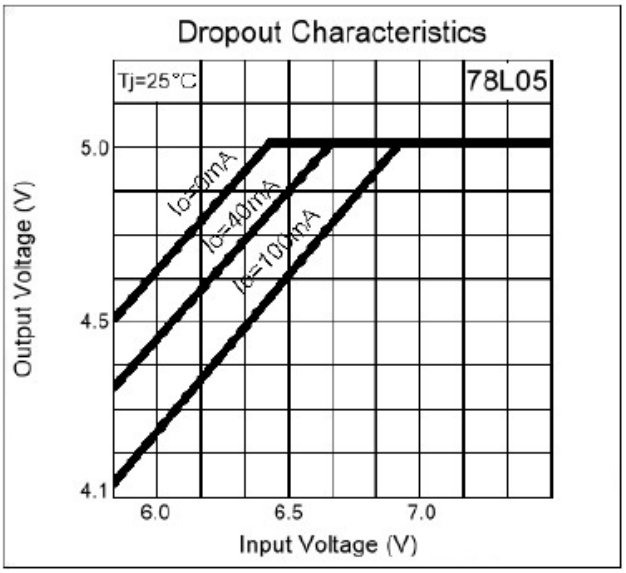

Characteristic Curves(Cont.)

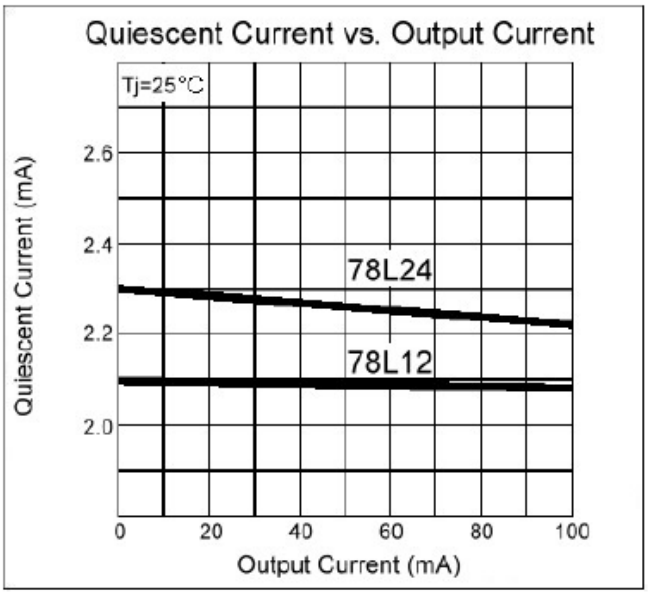

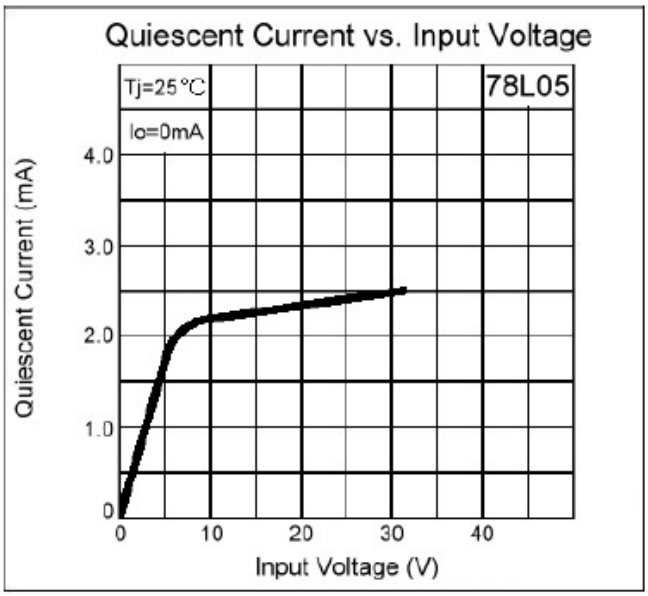

TO-92 Taping Outline

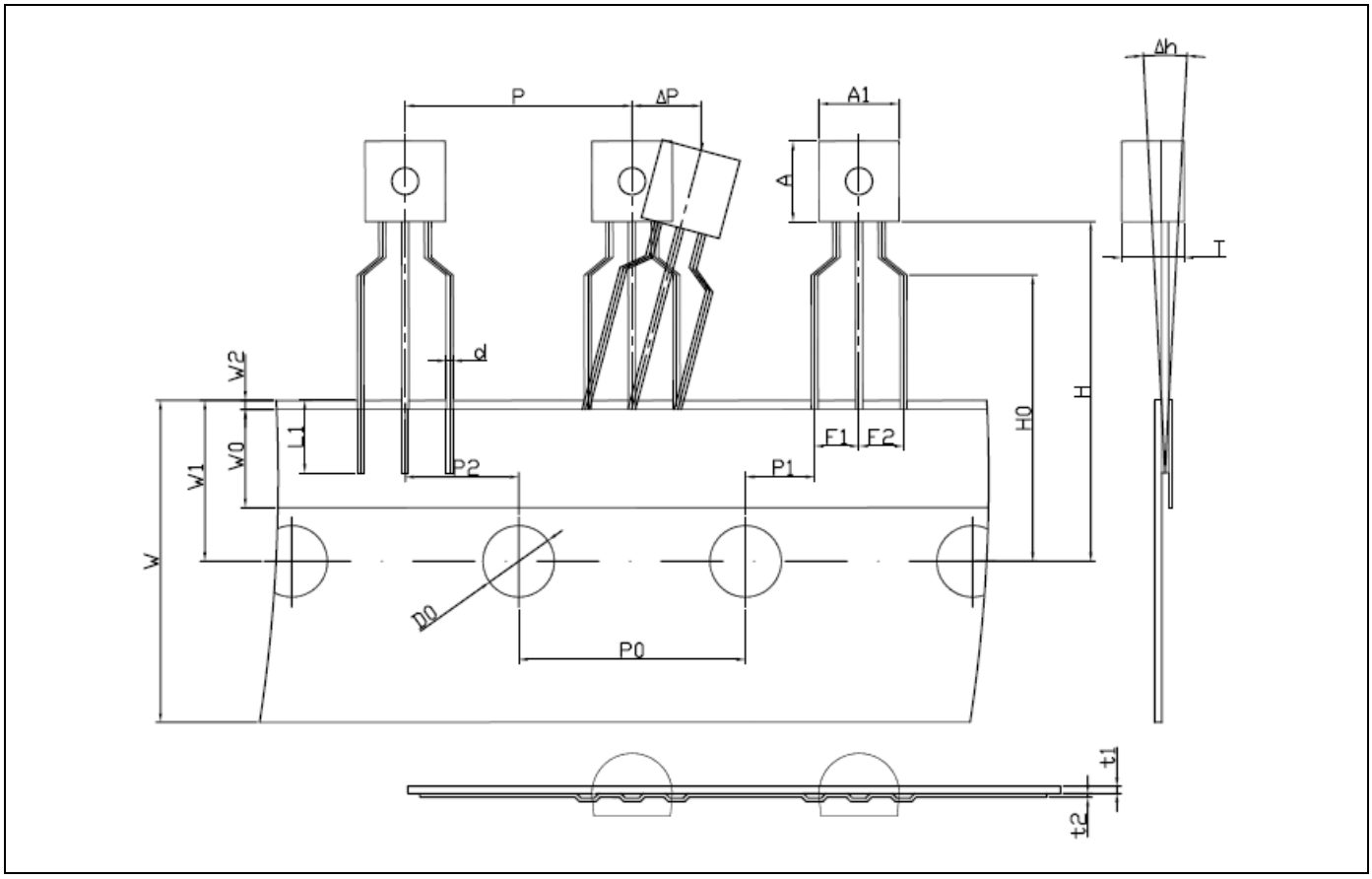

DIM	Item	Millimeters	
		Min.	Max.
A1	Body width	4.3	4.7
A	Body height	4.3	4.7
T	Body thickness	3.3	3.7
d	Lead wire diameter	0.38	0.55
P	Pitch of component	12.4	13
P0	Feed hole pitch	12.5	12.9
P2	Hole center to component center	6.05	6.65
F1,F2	Lead to lead distance	2.2	2.8
△h	Component alignment, F-R	-1	1
W	Type width	17.5	19
W0	Hole down tape width	5.5	6.5
W1	Hole position	8.5	9.5
W2	Hole down tape position	-	1
H	Height of component from tape center	18	21
H0	Lead wire clinch height	15.5	16.5
L1	Lead wire(tape portion)	2.5	-
D0	Feed hole diameter	3.8	4.2
t1	Taped Lead Thickness	0.35	0.45
t2	Carrier Tape Thickness	0.15	0.25
P1	Position of hole	3.55	4.15
△P	Component alignment	-0.1	0.1

Recommended wave soldering condition

Product	Peak Temperature	Soldering Time
Pb-free devices	260 +0/-5 °C	5 +1/-1 seconds

Recommended temperature profile for IR reflow

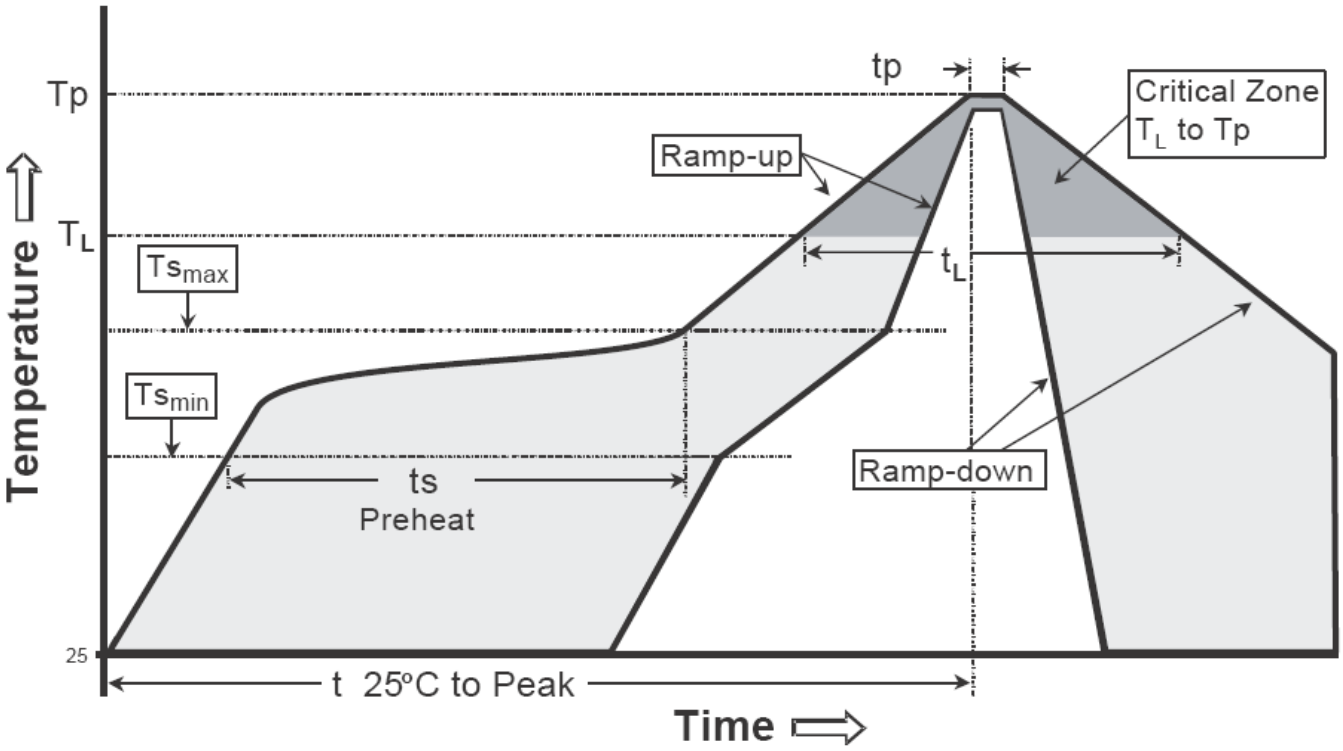

Profile feature	Sn-Pb eutectic Assembly	Pb-free Assembly
Average ramp-up rate (Tsmax to Tp)	3°C/second max.	3°C/second max.
Preheat −Temperature Min(T_S min) −Temperature Max(T_S max) −Time($t_{s\,min}$ to $t_{s\,max}$)	100°C 150°C 60-120 seconds	150°C 200°C 60-180 seconds
Time maintained above: −Temperature (T_L) − Time (t_L)	183°C 60-150 seconds	217°C 60-150 seconds
Peak Temperature(T_P)	240 +0/-5 °C	260 +0/-5 °C
Time within 5°C of actual peak temperature(tp)	10-30 seconds	20-40 seconds
Ramp down rate	6°C/second max.	6°C/second max.
Time 25 °C to peak temperature	6 minutes max.	8 minutes max.

Note : All temperatures refer to topside of the package, measured on the package body surface.

TO-92 Dimension

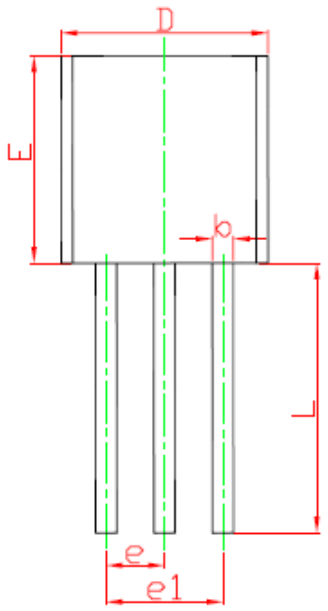

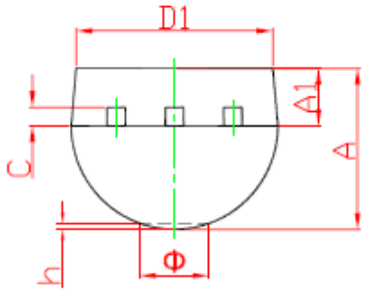

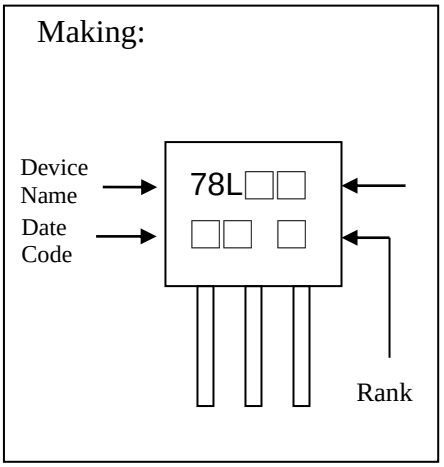

Vout:
5V→05
6V→06
8V→08
9V→09
10V→10
12V→12
15V→15
18V→18
24V→24

Style: Pin 1.Vout 2.GND 3.Vin

Date Code: Year+Month
Year: 7→2007, 8→2008
Month: 1→1, 2→2, • • •
9→9, A→10, B→11, C→12

3-Lead TO-92 Plastic Package
CYStek Package Code: A3

DIM	Inches		Millimeters		DIM	Inches		Millimeters	
	Min.	Max.	Min.	Max.		Min.	Max.	Min.	Max.
A	0.130	0.146	3.300	3.700	E	0.169	0.185	4.300	4.700
A1	0.043	0.055	1.100	1.400	e	0.050 TYP.		1.270 TYP.	
b	0.015	0.022	0.380	0.550	e1	0.096	0.104	2.440	2.640
c	0.014	0.020	0.360	0.510	L	0.555	0.571	14.100	14.500
D	0.169	0.185	4.300	4.700	Φ	-	0.063	-	1.600
D1	0.135	-	3.430	-	h	0.000	0.015	0.000	0.380

Notes: 1.Controlling dimension: millimeters.
2.Maximum lead thickness includes lead finish thickness, and minimum lead thickness is the minimum thickness of base material.
3.If there is any question with packing specification or packing method, please contact your local CYStek sales office.

Material:

- Lead: Pure tin plated.
- Mold Compound: Epoxy resin family, flammability solid burning class: UL94V-0.

Important Notice:

- All rights are reserved. Reproduction in whole or in part is prohibited without the prior written approval of CYStek.
- CYStek reserves the right to make changes to its products without notice.
- CYStek ***semiconductor products are not warranted to be suitable for use in Life-Support Applications, or systems.***
- CYStek assumes no liability for any consequence of customer product design, infringement of patents, or application assistance.