Dual P-Channel Enhancement Mode Power MOSFET

MTB24B03Q8

Features

- Low On Resistance
- Low Gate Charge
- Fast Switching Characteristic

BV_{DSS}	-30V
I_D@V_{GS}=-10V, T_C=25°C	-11A
I_D@V_{GS}=-10V, T_A=25°C	-5.5A
$R_{DS(ON)}$ typ.@V_{GS}=-10V, I_D=-5A	20mΩ
$R_{DS(ON)}$ typ.@V_{GS}=-4.5V, I_D=-3A	28mΩ

Equivalent Circuit

MTB24B03Q8

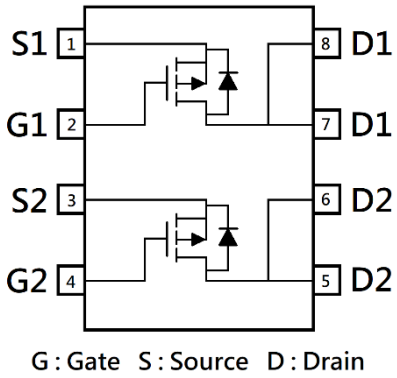

G : Gate S : Source D : Drain

Outline

SOP-8

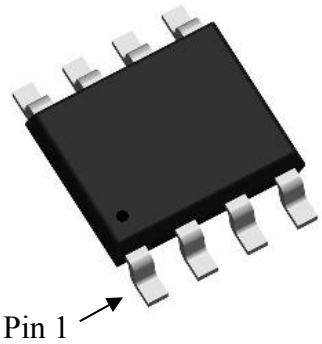

Ordering Information

Device	Package	Shipping
MTB24B03Q8-0-TF-G	SOP-8 (Pb-free lead plating and halogen-free package)	4000 pcs / Tape & Reel

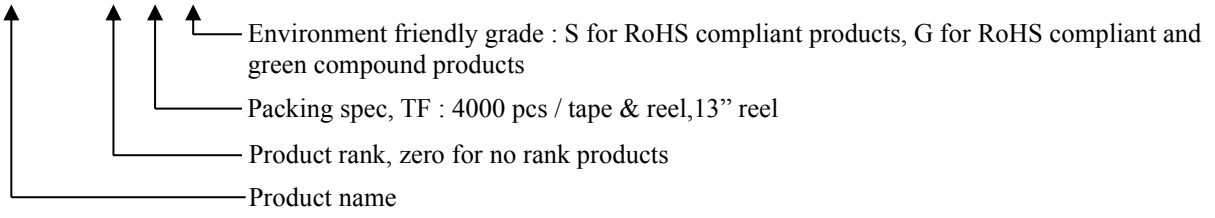

Absolute Maximum Ratings (T_A=25°C)

Parameter			Symbol	Limits	Unit
Drain-Source Voltage			V_{DS}	-30	V
Gate-Source Voltage			V_{GS}	±20	
Continuous Drain Current @ V_{GS}=-10V, T_C=25°C		*a	I_D	-11	A
Continuous Drain Current @ V_{GS}=-10V, T_C=100°C		*a		-7	
Continuous Drain Current @ V_{GS}=-10V, T_A=25°C		*b		-5.5	
Continuous Drain Current @ V_{GS}=-10V, T_A=70°C		*b		-4.4	
Pulsed Drain Current		*c	I_{DM}	-44	
Continuous Body Diode Forward Current @ T_C=25°C		*a	I_S	-4.6	
Avalanche Current @ L=0.1mH			I_{AS}	-15	
Avalanche Energy @ L=0.5mH			E_{AS}	16	mJ
Total Power Dissipation	T_C=25°C	*a	P_D	5.6	W
	T_C=100°C	*a		2.2	
	T_A=25°C	*b		1.4	
	T_A=70°C	*b		0.9	
Operating Junction and Storage Temperature Range			T_J, T_{stg}	-55~+150	°C

Thermal Data

Parameter		Symbol	Steady State	Unit
Thermal Resistance, Junction-to-case		$R_{\theta JC}$	22	°C/W
Thermal Resistance, Junction-to-ambient	*b	$R_{\theta JA}$	85	

Note:

*a. The power dissipation P_D is based on $T_{J(MAX)}$=150°C, using junction-to-case thermal resistance, and is more useful in setting the upper dissipation limit for cases where additional heatsinking is used.

*b. The value of $R_{\theta JA}$ is measured with the device mounted on 1 in² FR-4 board with 2 oz. copper, in a still air environment with T_A=25°C. The power dissipation P_D is based on $R_{\theta JA}$ and the maximum allowed junction temperature of 150°C. The value in any given application depends on the user's specific board design.

*c. Repetitive rating, pulse width limited by junction temperature $T_{J(MAX)}$=150°C. Ratings are based on low frequency and low duty cycles to keep initial T_J=25°C.

Electrical Characteristics (T_A=25°C, unless otherwise specified)

Symbol	Min.	Typ.	Max.	Unit	Test Conditions
Static					
BV_{DSS}	-30	-	-	V	V_{GS}=0V, I_D=-250μA
$V_{GS(th)}$	-1	-	-2.5		V_{DS}=V_{GS}, I_D=-250μA
G_{FS}	-	9	-	S	V_{DS}=-10V, I_D=-5A
I_{GSS}	-	-	±100	nA	V_{GS}=±20V, V_{DS}=0V
I_{DSS}	-	-	-1	μA	V_{DS}=-24V, V_{GS}=0V
$R_{DS(ON)}$	-	20	26	mΩ	V_{GS}=-10V, I_D=-5A
	-	28	39		V_{GS}=-4.5V, I_D=-3A
Dynamic					
Ciss	-	1350	-	pF	V_{DS}=-15V, V_{GS}=0V, f=1MHz
Coss	-	145	-		
Crss	-	120	-		
Rg	-	20	-	Ω	f=1MHz
Qg *1, 2	-	26	-	nC	V_{DS}=-15V, I_D=-5A, V_{GS}=-10V
Qgs *1, 2	-	4	-		
Qgd *1, 2	-	5	-		
$t_{d(ON)}$ *1, 2	-	7.5	-	ns	V_{DS}=-15V, I_D=-5A, V_{GS}=-10V, R_{GS}=6Ω
tr *1, 2	-	15	-		
$t_{d(OFF)}$ *1, 2	-	93	-		
t_f *1, 2	-	51	-		
Source-Drain Diode					
V_{SD} *1	-	-0.78	-1.2	V	I_S=-5A, V_{GS}=0V
trr	-	10	-	ns	I_F=-5A, dI_F/dt=100A/μs
Qrr	-	4.5	-	nC	

Note:

*1. Pulse Test : Pulse Width ≤300μs, Duty Cycle≤2%

*2. Independent of operating temperature

Typical Characteristics

Typical Output Characteristics

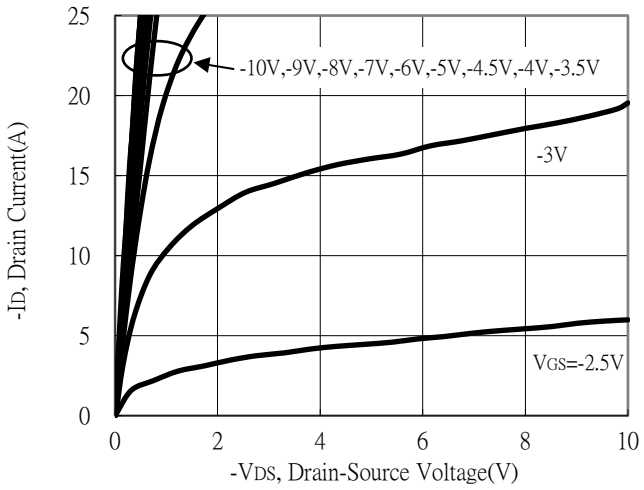

Breakdown Voltage vs Ambient Temperature

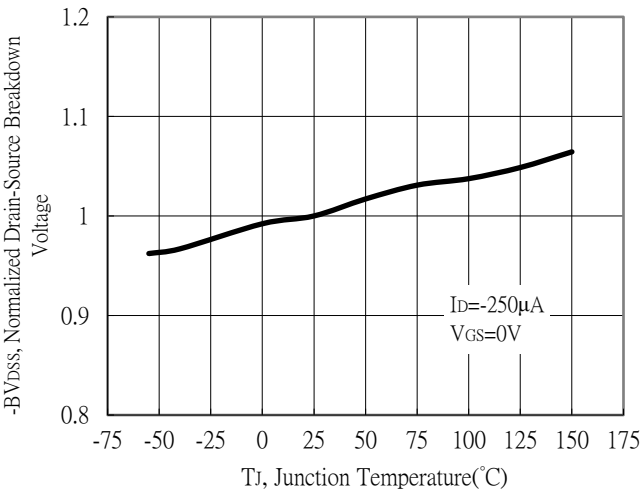

Static Drain-Source On-State resistance vs Drain Current

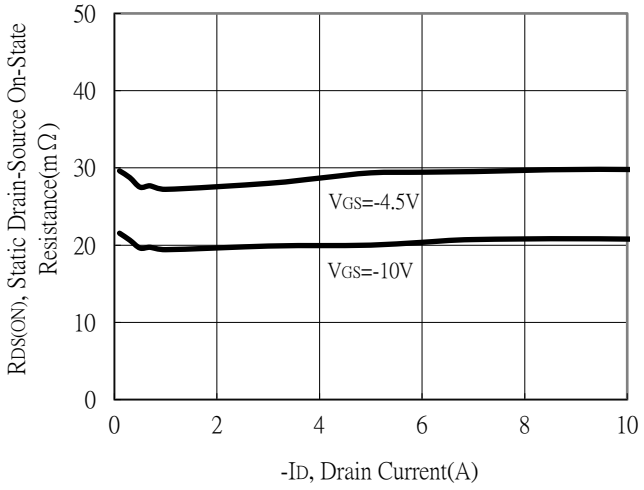

Body Diode Current vs Source-Drain Voltage

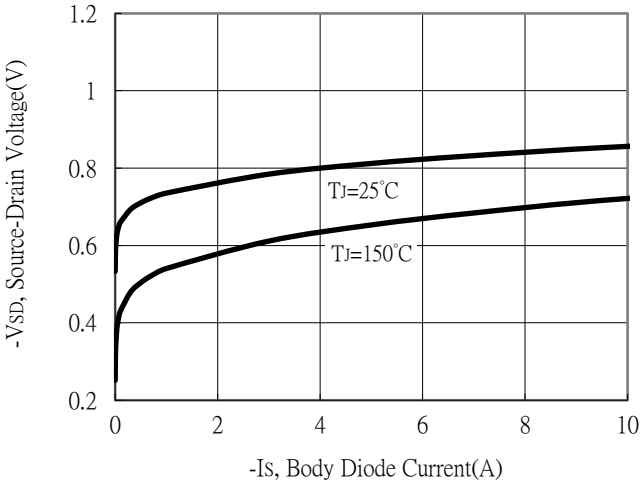

Static Drain-Source On-State Resistance vs Gate-Source Voltage

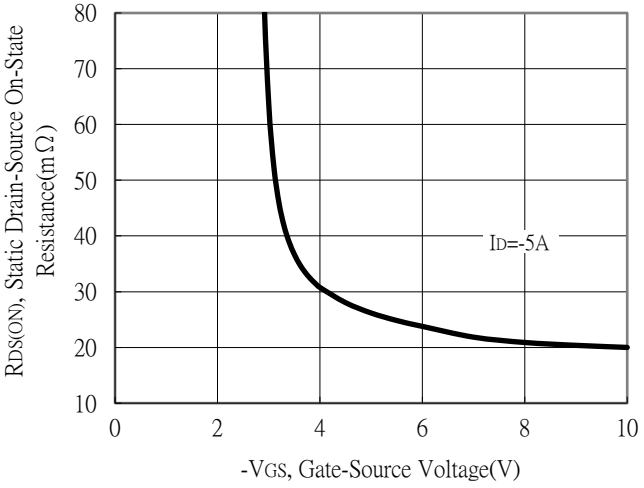

Drain-Source On-State Resistance vs Junction Temperature

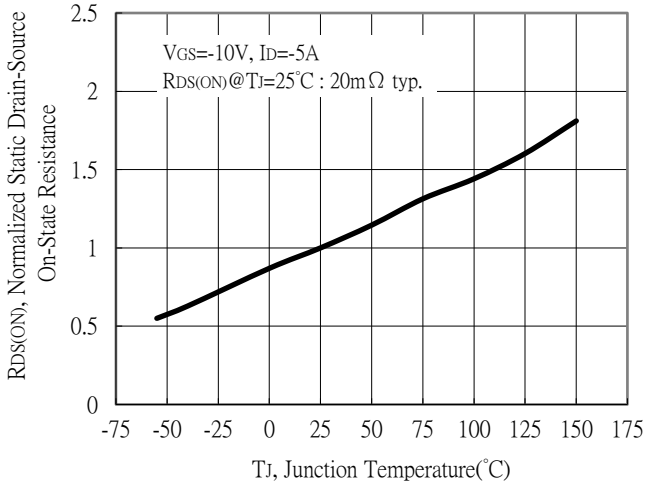

Typical Characteristics (Cont.)

Capacitance vs Drain-to-Source Voltage

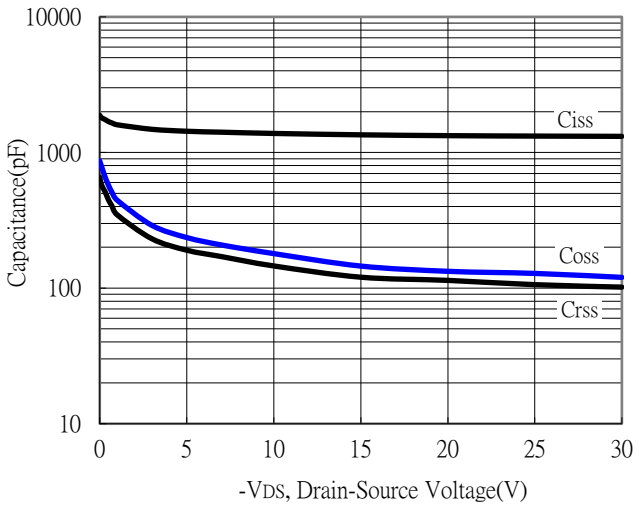

Threshold Voltage vs Junction Temperature

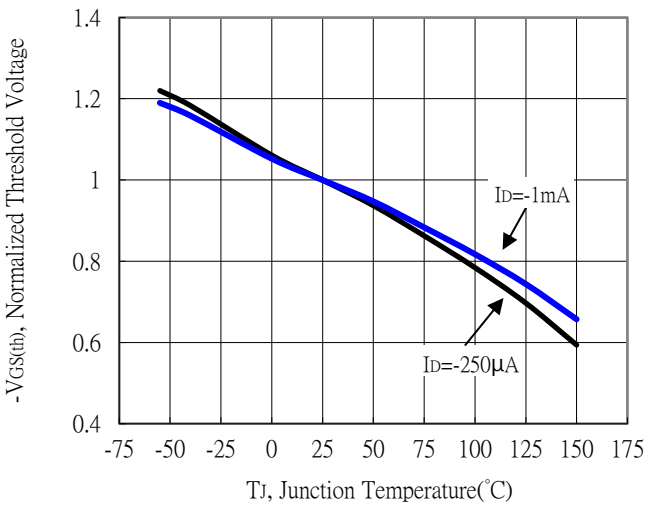

Forward Transfer Admittance vs Drain Current

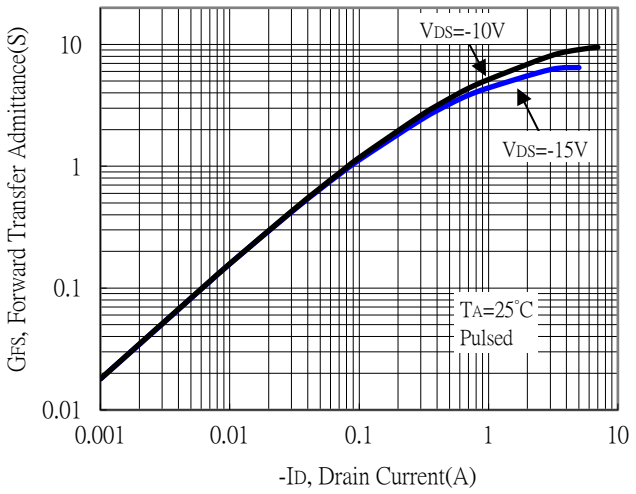

Gate Charge Characteristics

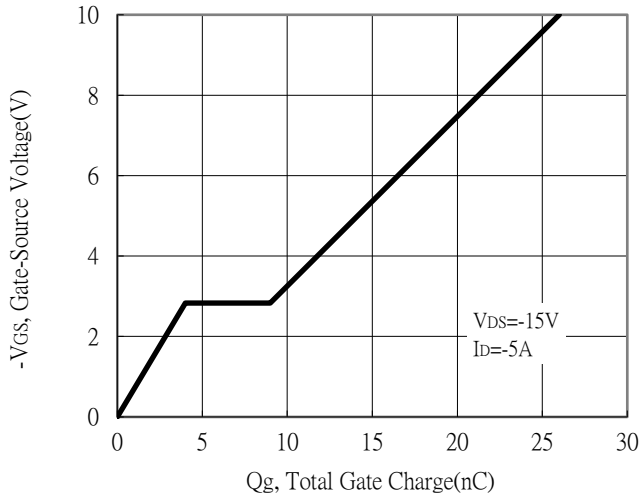

Maximum Safe Operating Area

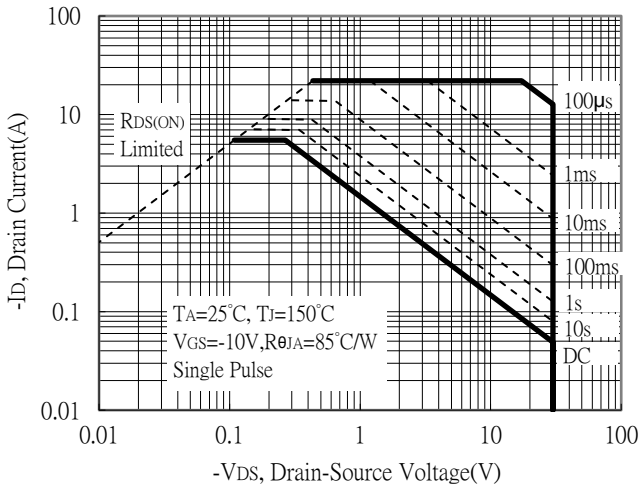

Maximum Drain Current vs Junction Temperature

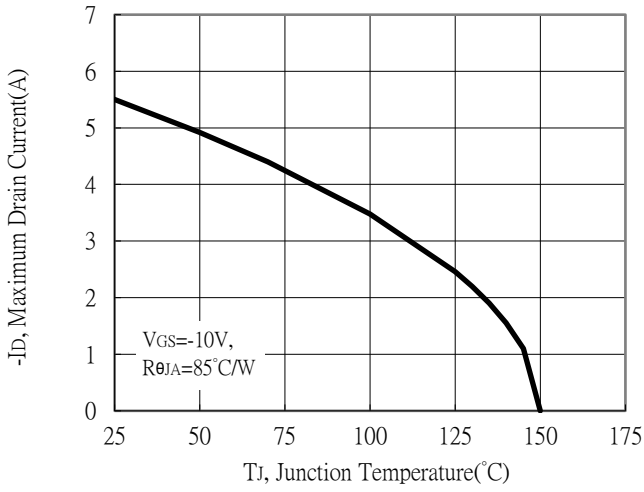

Typical Characteristics (Cont.)

Single Pulse Power Rating, Junction to Ambient

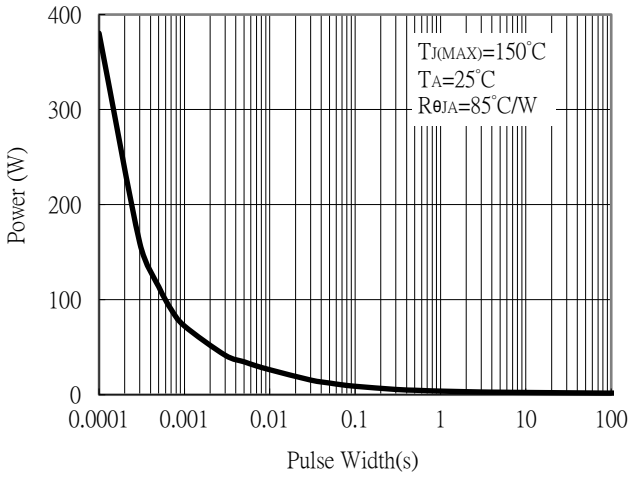

Transient Thermal Response Curves

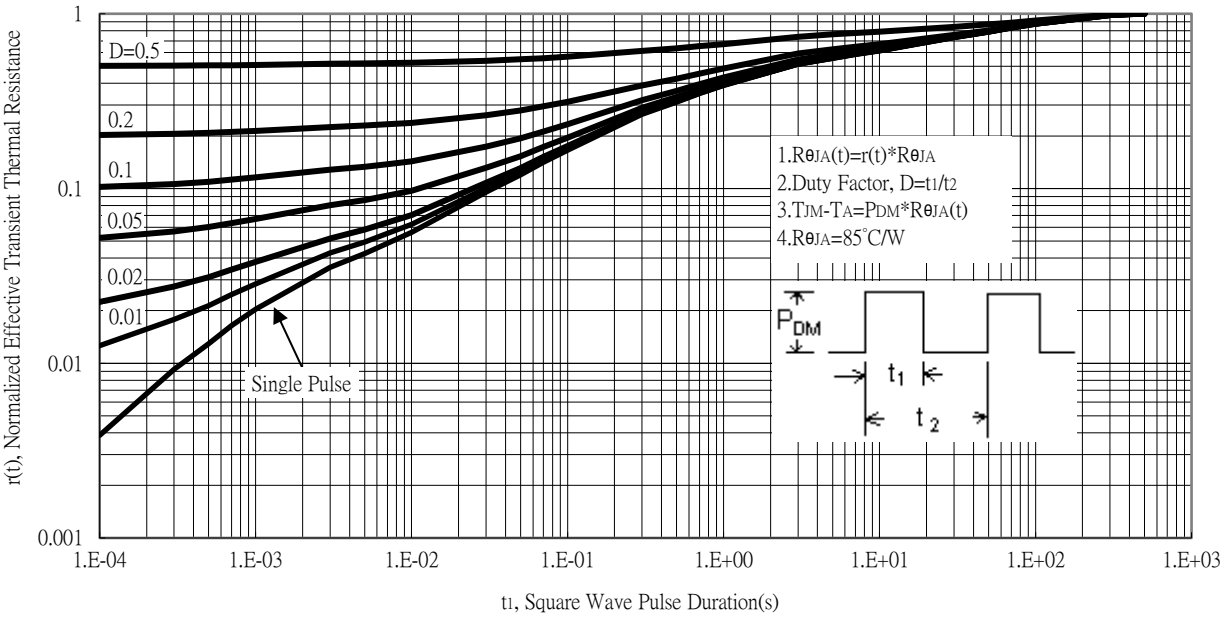

Recommended Soldering Footprint

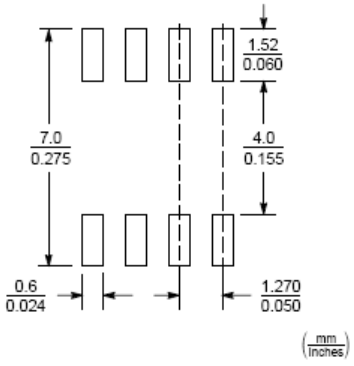

Reel Dimension

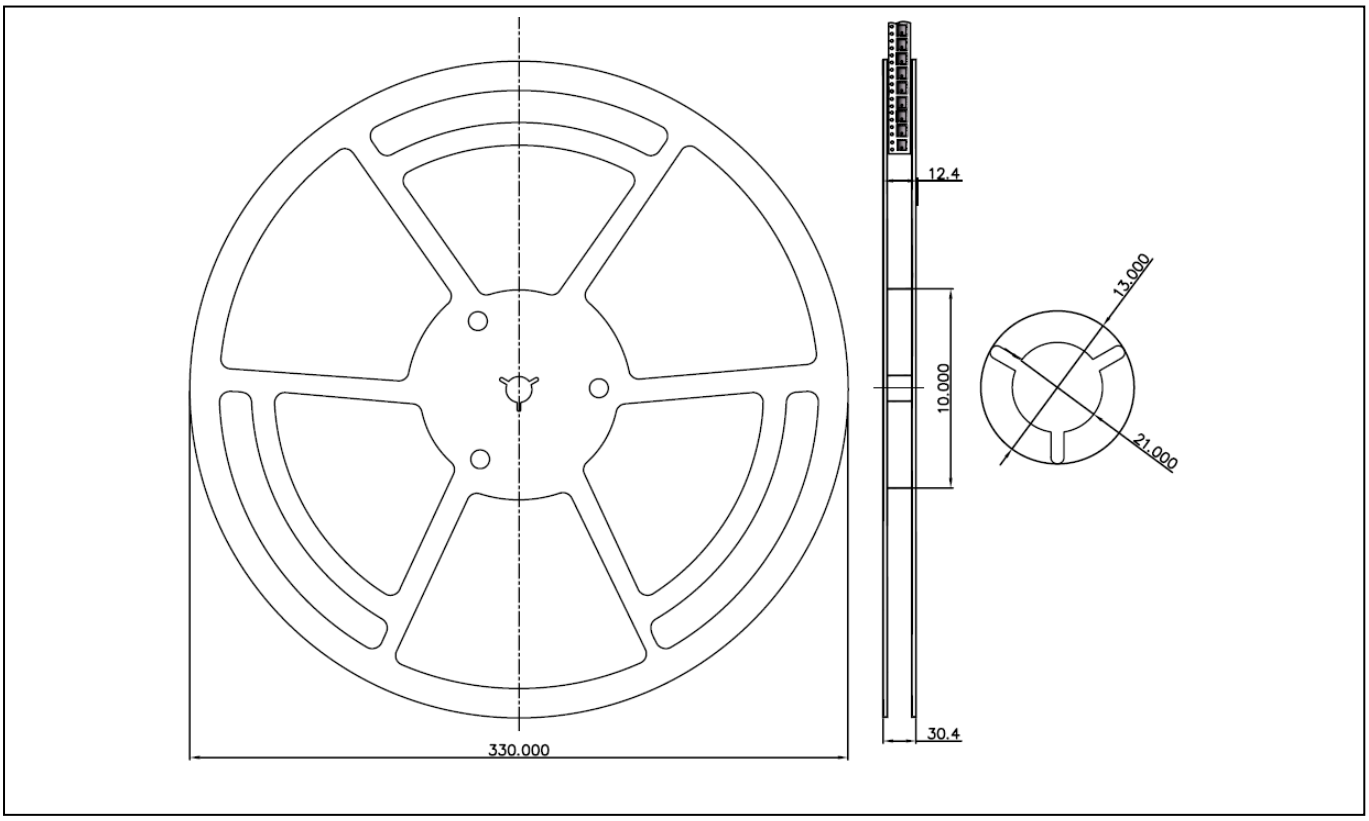

Carrier Tape Dimension

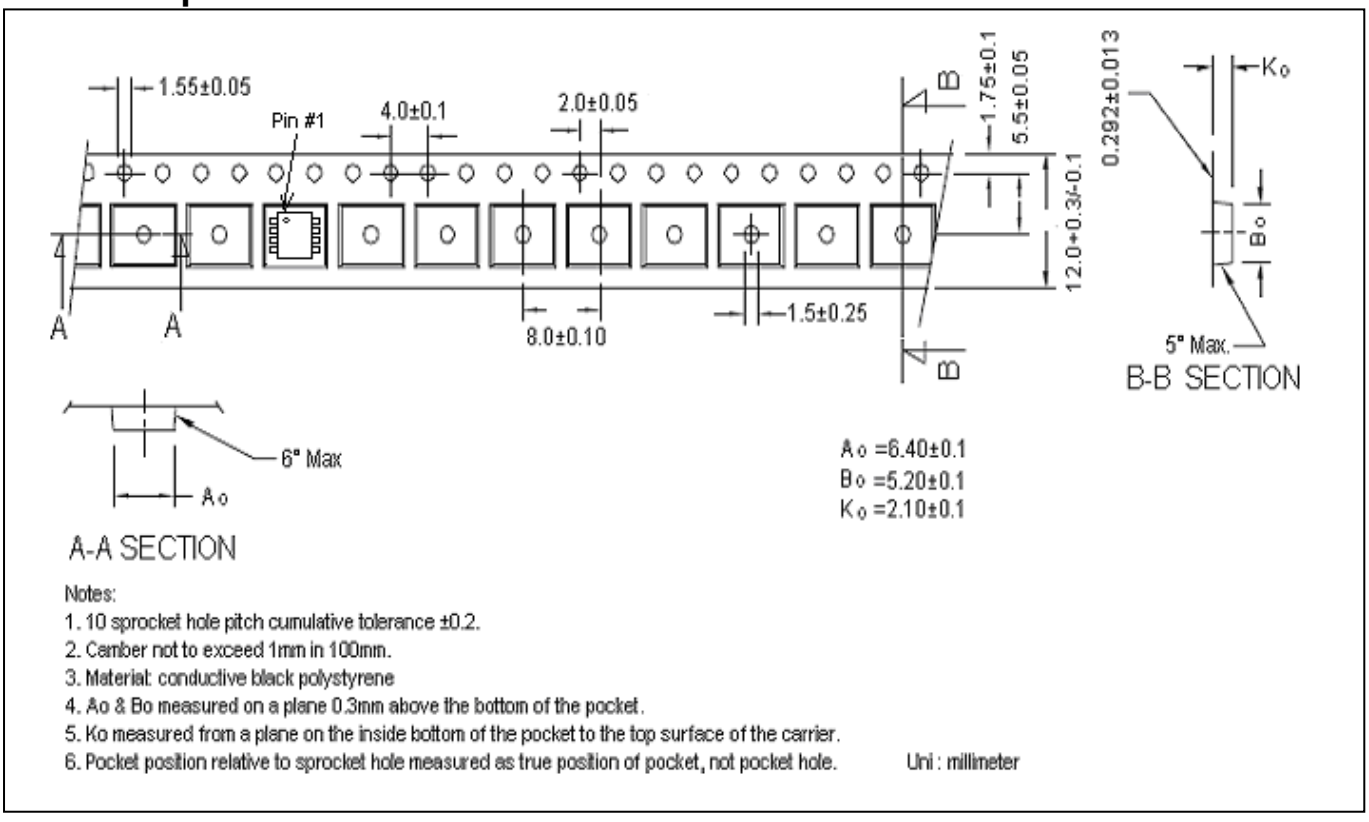

Notes:
1. 10 sprocket hole pitch cumulative tolerance ±0.2.
2. Camber not to exceed 1mm in 100mm.
3. Material: conductive black polystyrene
4. Ao & Bo measured on a plane 0.3mm above the bottom of the pocket.
5. Ko measured from a plane on the inside bottom of the pocket to the top surface of the carrier.
6. Pocket position relative to sprocket hole measured as true position of pocket, not pocket hole.

Uni : millimeter

Recommended wave soldering condition

Product	Peak Temperature	Soldering Time
Pb-free devices	260 +0/-5 °C	5 +1/-1 seconds

Recommended temperature profile for IR reflow

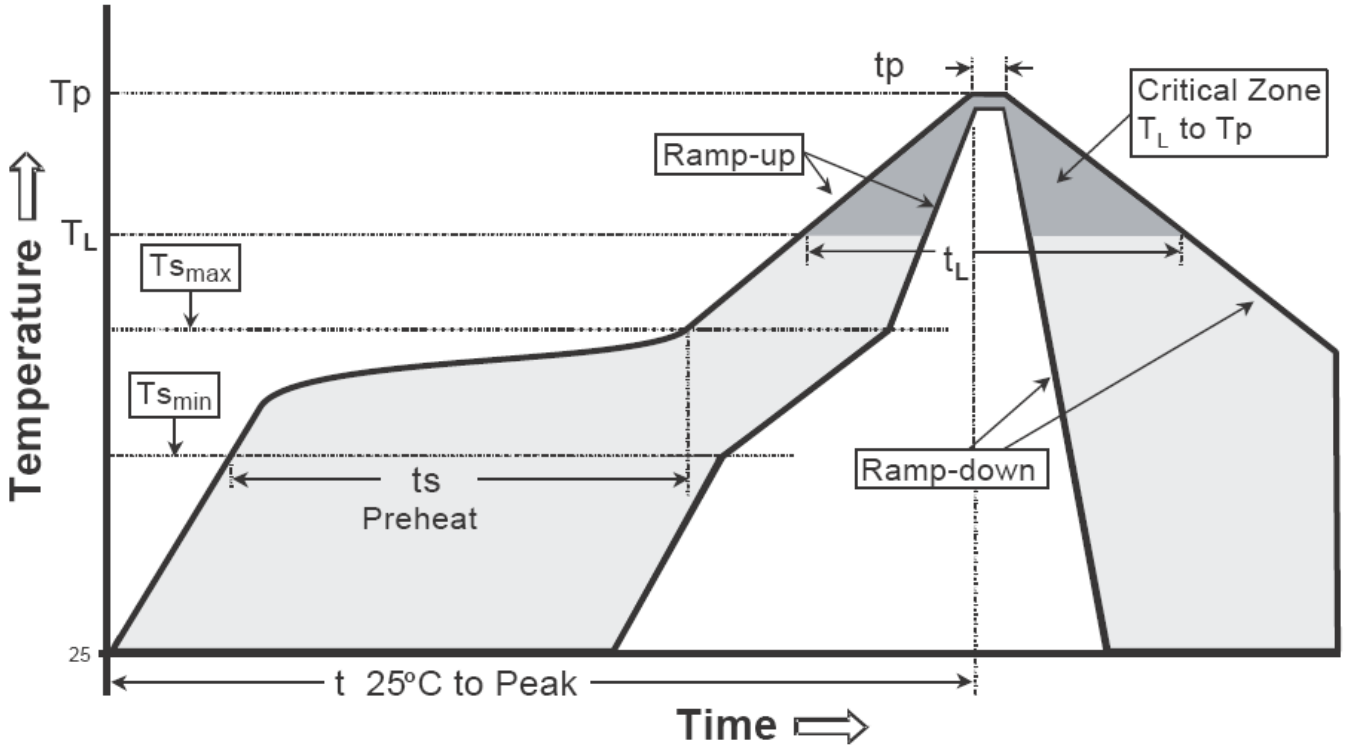

Profile feature	Sn-Pb eutectic Assembly	Pb-free Assembly
Average ramp-up rate (Tsmax to Tp)	3°C/second max.	3°C/second max.
Preheat −Temperature Min(Ts min) −Temperature Max(Ts max) −Time(ts min to ts max)	 100°C 150°C 60-120 seconds	 150°C 200°C 60-180 seconds
Time maintained above: −Temperature (TL) − Time (tL)	 183°C 60-150 seconds	 217°C 60-150 seconds
Peak Temperature(TP)	240 +0/-5 °C	260 +0/-5 °C
Time within 5°C of actual peak temperature(tp)	10-30 seconds	20-40 seconds
Ramp down rate	6°C/second max.	6°C/second max.
Time 25 °C to peak temperature	6 minutes max.	8 minutes max.

Note : All temperatures refer to topside of the package, measured on the package body surface.

SOP-8 Dimension

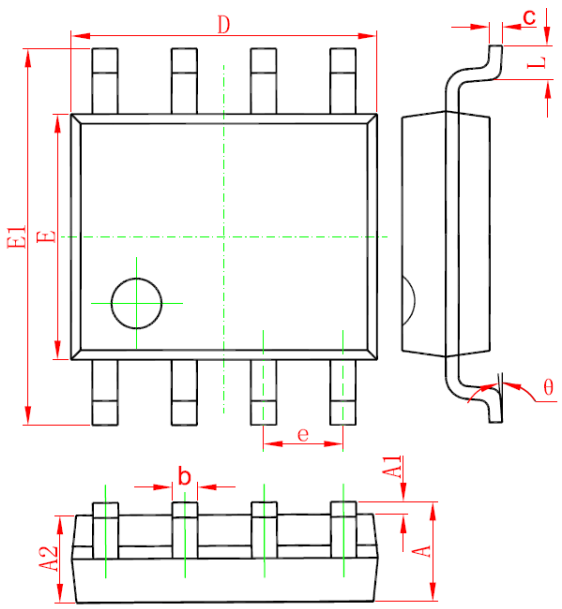

8-Lead SOP-8 Plastic Package
CYStek Package Code: Q8

Marking:

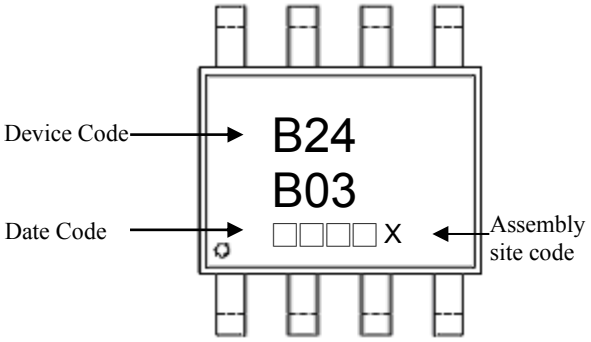

Date Code(counting from left to right) :
1st code: year code, the last digit of Christian year
2nd code : month code, Jan→A, Feb→B, Mar→C, Apr→D
May→E, Jun→F, Jul→G, Aug→H, Sep→J,
Oct→K, Nov→L, Dec→M
3rd and 4th codes : production serial number, 01~99

Assembly site code : blank→ site 1, G →site 2

*: Typical

DIM	Millimeters		Inches		DIM	Millimeters		Inches	
	Min.	Max.	Min.	Max.		Min.	Max.	Min.	Max.
A	1.350	1.750	0.053	0.069	E	3.800	4.000	0.150	0.157
A1	0.100	0.250	0.004	0.010	E1	5.800	6.200	0.228	0.244
A2	1.350	1.550	0.053	0.061	e	*1.270		*0.050	
b	0.330	0.510	0.013	0.020	L	0.400	1.270	0.016	0.050
c	0.170	0.250	0.006	0.010	θ	0°	8°	0°	8°
D	4.700	5.100	0.185	0.200					

Notes: 1.Controlling dimension: millimeters.
2.Maximum lead thickness includes lead finish thickness, and minimum lead thickness is the minimum thickness of base material.
3.If there is any question with packing specification or packing method, please contact your local CYStek sales office.

Material:

- Lead: Pure tin plated.
- Mold Compound: Epoxy resin family, flammability solid burning class: UL94V-0.

Important Notice:

- All rights are reserved. Reproduction in whole or in part is prohibited without the prior written approval of CYStek.
- CYStek reserves the right to make changes to its products without notice.
- CYStek ***semiconductor products are not warranted to be suitable for use in Life-Support Applications, or systems.***
- CYStek assumes no liability for any consequence of customer product design, infringement of patents, or application assistance.